REV.	DESCRIPTION	DATE
A	RELEASED	2020/04/11

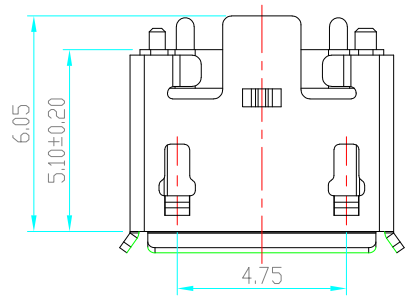

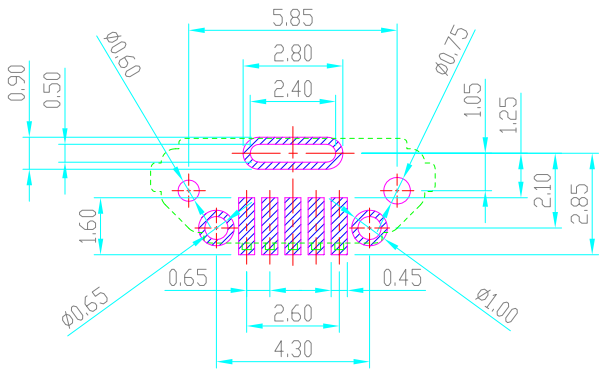

RECOMMEND PCB LAYOUT TOP VIEW

TOLERANCE: ±0.05

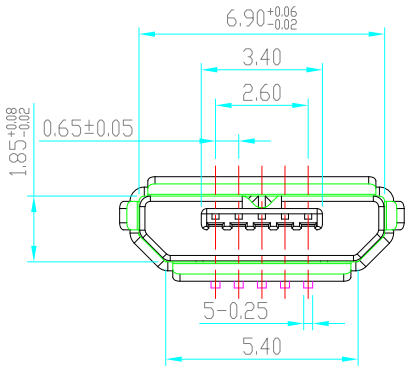

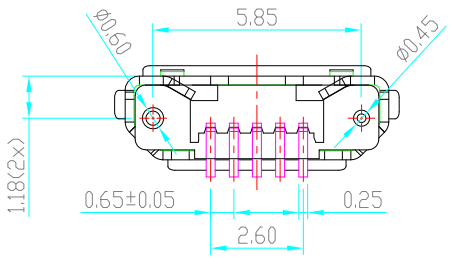

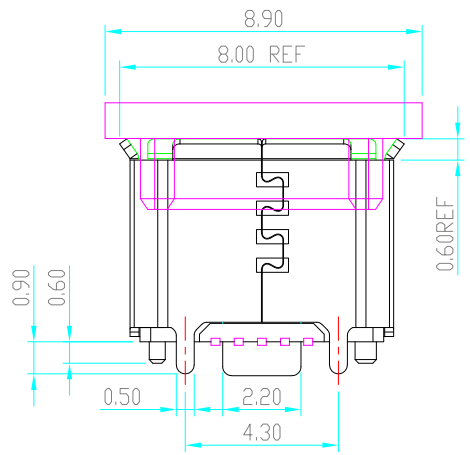

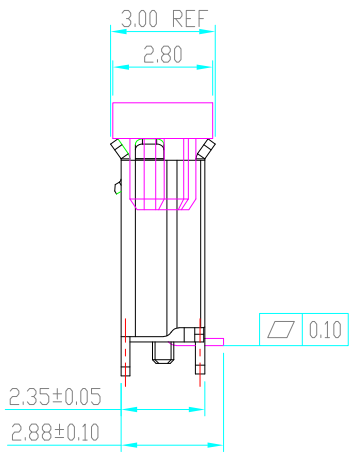

1. 产品规格:
   1-1. 插入力:35N MAX.
   1-2. 拔出力:10N MIN. INITIAL; 8-20N AFTER TESTED
   1-3. 额定电流:1.0A
   1-4. 额定电压:30V
   1-5. 耐久性:10000 CYCLES MIN.
   1-6. 耐电压:100V AC MIN.
   1-7. 接触阻抗:30mΩ MAX. INITIAL;40mΩ MAX AFTER TESTED
   1-8. 绝缘电阻:100MΩ MIN
   1-9. 工作温度:-30° TO +80°
2. 材质:
   2.1胶芯: LCP UL94V-0, COLOR:BLACK
   2.2端子: C2680R-H, 镍底, 镀金G/F
   2.3外壳: SUS201(或301), 表面镀雾锡(或镀镍)

PART NUMBER INFORMATION :

230F205-XN405S-X

- SERIES CODE
- SMT 90°
- FEMALE
- MICRO USB
- NUMBER OF POSITIONS
- R:RoHS
  H:HALOGEN FREE
- FOLLOW NUMBER
- UPRIGHT TYPE
- SHELL PLATING:
  N:NI PLATED
- PLATING SEE TABLE

DESCRIPTION OF PLATING ON TERMINALS			
NO.	EXPLAIN	NO.	EXPLAIN
0	GOLD FLASH	3	GOLD 15u''
1	GOLD 5u''	4	GOLD 20u''
2	GOLD 10u''	H	G/F + TIN

TOLERANCE
.0=±0.25
.00=±0.15
.000=±0.05
ANG.=±3°

UNITS : mm

DRAWER XU
CHECK LU
APP'D HAWK
PRODUCT SPEC. —

INMO
东莞市英墨电子有限公司
INMO Electronics Co.,Ltd

NAME
MICRO USB 5P/F 5.6H
立贴 直插 翻边

DRAW NO.
R230F205-XN405S-X

SCALE	SIZE	SHEET	REV.
1:6	A4	1 OF 1	A

DRAWING NAME:R